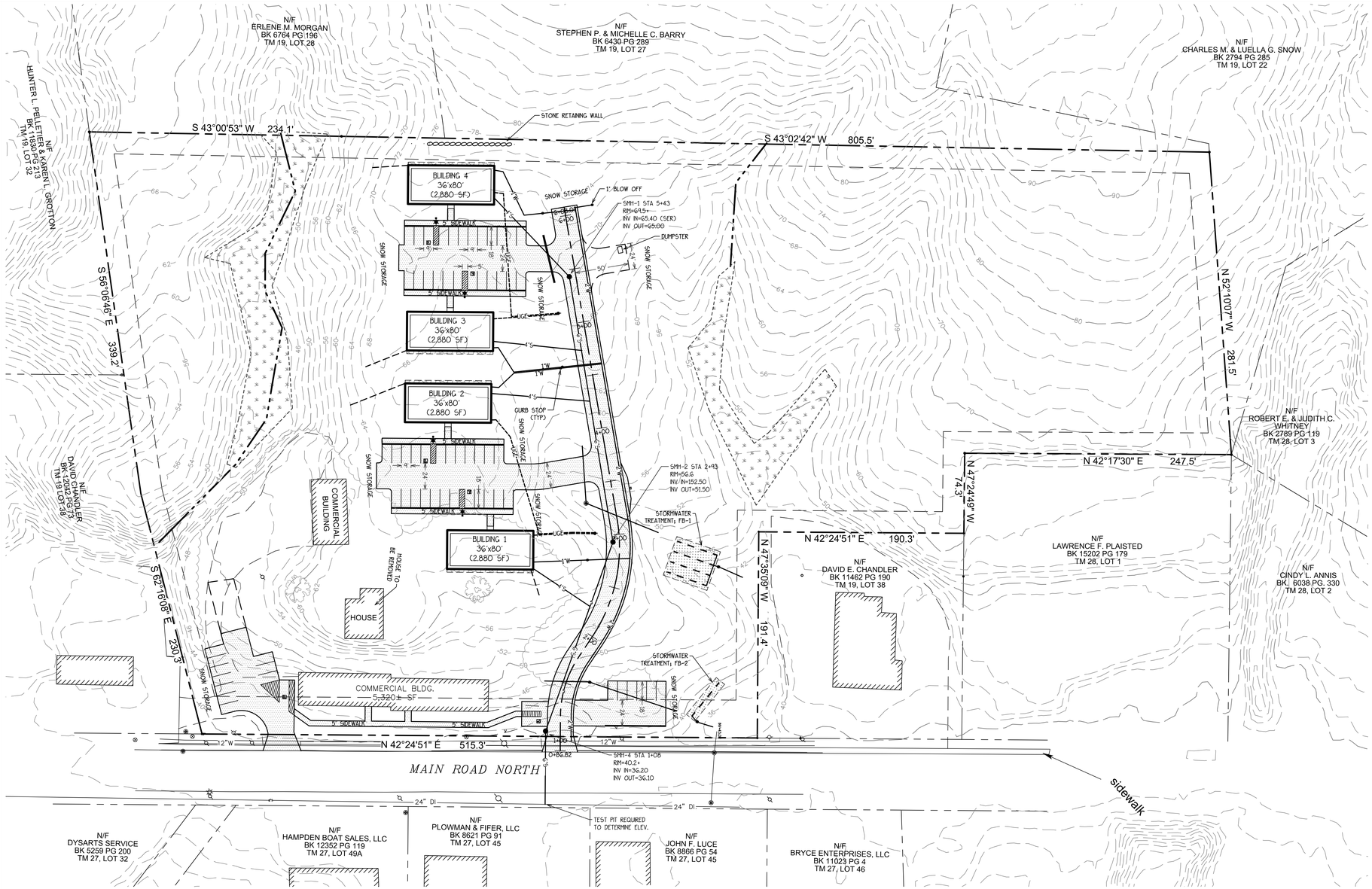

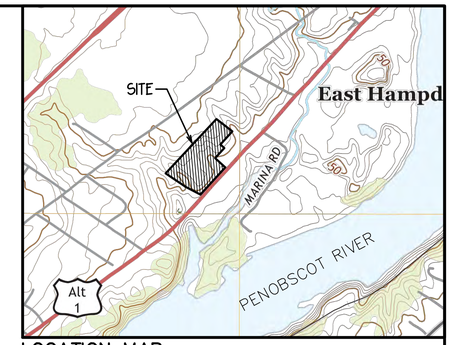

LOCATION MAP

1"=1000'±

SITE PLAN NOTES:

1. RECORD OWNER OF PROPERTY IS DLMM RENTAL, LLC, 5 GARDNER, MAINE BY DEED RECORDED IN PENOBSCOT COUNTY REGISTRY OF DEEDS, BOOK 15383, PAGE 200.
2. THE PROPERTY IS SHOWN ON HAMPDEN'S TAX MAP 19 AS LOT 37. THE TOTAL AREA OF THE PARCELS IS 10.45 AC.
3. THE PROPERTY IS LOCATED IN THE BUSINESS DISTRICT.

DIMENSIONAL REQUIREMENTS	
MIN LOT SIZE	12,500 SF
MIN ROAD FRONTAGE	75 FT
STREET YARD	35 FT
OTHER YARD	20 FT
MAX BLDG COVERAGE	20%
MAX IMPERVIOUS SURFACE	40%
MAX HGT	35 FT

4. BOUNDARY SURVEY PREPARED BY PORTER LAND SURVEYORS, INC., PLYMOUTH, MAINE. TOPOGRAPHIC DATA BASED ON MEGIS LIDAR DATA WITH SUPPLEMENTAL DATA BY PORTER.
5. THE PROJECT IS OFFICE, BUSINESS OR PROFESSIONAL (G-5) USE IN SINGLE OWNERSHIP AS A RENTAL DEVELOPMENT. ALL MAINTENANCE OF LAND AND BUILDINGS IS THE RESPONSIBILITY OF THE OWNER.
6. TOTAL DISTURBED AREA IS ESTIMATED AT 2.9± AC WITH LESS THAN 1 AC DISTURBED AT ANY TIME. TOTAL NEW IMPERVIOUS AREA IS 47,315± SF AND TOTAL RESTORED IMPERVIOUS AREA IS 7,375± SF FOR A NET NEW IMPERVIOUS AREA OF 39,940± SF (0.92 AC). TOTAL NEW BUILDING AREA IS 11,520 SF AND TOTAL EXISTING BUILDING AREA IS 7,290± SF. TOTAL BUILDING AREA IS 18,810 SF OR A BUILDING COVERAGE OF 4.1%. TOTAL IMPERVIOUS SURFACE IS 1.52± AC OR 14.5%. THE PROJECT WILL REQUIRE A DEP STORMWATER LAW PERMIT.
7. WETLANDS WERE IDENTIFIED, DELINEATED AND LOCATED BY BURMAN LAND + TREE, ORRINGTON, MAINE. NO WETLANDS ARE IMPACTED BY THIS PROJECT.
8. WATER SUPPLY IS TO BE PROVIDED BY HAMPDEN WATER DISTRICT AND WASTEWATER DISPOSAL WILL BE INTO THE MUNICIPAL SEWER SYSTEM. TOTAL ESTIMATED USE RATES FOR THE PROPERTY INCLUDING EXISTING FACILITES ARE 800± GPD.
9. BUILDING LIGHTING SHALL BE ENTRANCE FIXTURES MOUNTED AT THE DOORWAYS TO THE BUILDINGS. SITE LIGHTING TO BE LITHONIA DSXO LED, P2 OPTICS, 30K, T2M DISTRIBUTION, HOUSE SIDE SHIELD, TIMER/DIMMER AND MOUNTED AT 20'.
10. NO SIGNS ARE PROPOSED.
11. PARKING REQUIRED IS AS FOLLOWS
    PROPOSED NEW BUILDINGS (OFFICE): 46 SPACES REQUIRED; 48 SPACES PROVIDED
    EXISTING BUILDING (OFFICE): RANDOM SPACES EXISTING; 19 SPACE PROVIDED
12. NEW TRAFFIC TO BE GENERATED BY THE DEVELOPMENT BASED ON ITE 7TH EDITION TRIP GENERATION MANUAL FOR OFFICE USE (11,520 SF) IS AS FOLLOWS:

AVERAGE WEEKDAY	127 TRIPS
PEAK AM HOUR	18 TRIPS
PEAK PM HOUR	17 TRIPS

SURVEY NOTES:

1. BEARINGS SHOWN ARE RELATIVE TO GRID NORTH, MAINE STATE COORDINATE SYSTEM ME2000 CENTRAL ZONE, BASED ON THE NORTH AMERICAN DATUM OF 1983 (NAD 83).
2. DEED REFERENCES ARE TO THE PENOBSCOT COUNTY REGISTRY OF DEEDS.
3. ROAD RIGHT-OF-WAY LIMITS WERE PLOTTED AS OFFSETS FROM THE CENTERLINE OF THE TRAVELED WAY AND MAY DIFFER FROM ACTUAL RIGHT-OF-WAY LIMITS.
4. #5 REBARS SET WERE CAPPED WITH A YELLOW PLASTIC CAP INSCRIBED "TED J. PORTER ME PLS 2514".
5. OTHER PROPERTY LINES WERE NOT SURVEYED BUT PLOTTED PER DEED DESCRIPTIONS AND OTHER EVIDENCE.
6. AREA CALCULATION DOES NOT INCLUDE LAND WITHIN THE ROAD RIGHT-OF-WAY TO WHICH THE OWNER MAY HAVE TITLE.
7. PLAN REFERENCE: STATE OF MAINE DERPARTMENT OF TRANSPORTATION, RIGHT OF WAY MAP DATED AUGUST 2003 (DOT FILE NO. 10-413, SHEET 1-10.

LEGEND

EXISTING	DESCRIPTION	PROPOSED
	PROPERTY/ROW	
	SETBACK	
	BUILDING W/DOOR LOCATION (TYP)	
	WETLANDS	
	EDGE PAVEMENT	
S	SEWER	S
	UTILITY POLE	
	TREE LINE	
	SILT FENCE	SF SF

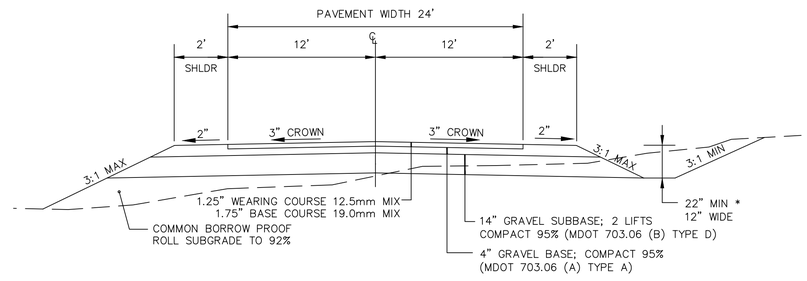

ENTRANCE DRIVE SECTION

NOT TO SCALE

SCALE: 1"= 50'

50' 0' 50' 100' 150' 200'

REV:	DATE:	BY:	COMMENTS:

DATE: 27 AUG 20 | DESIGN BY: JRK | SCALE: 1"=50' | PROJ. NO: 797

SITE PLAN
DLM PROFESSIONAL CENTER
588 MAIN ROAD NORTH
HAMPDEN, MAINE

FOR:
DLM RENTAL, LLC
21 HUSTUS ROAD
BROOKS, ME 04921

STATE OF MAINE JAMES R. KISER LICENSED PROFESSIONAL ENGINEER

KISER

ENGINEERING & DEVELOPMENT CONSULTING
PO BOX 282, HAMPDEN, MAINE 04444
207-862-4700

SHEET 1-3

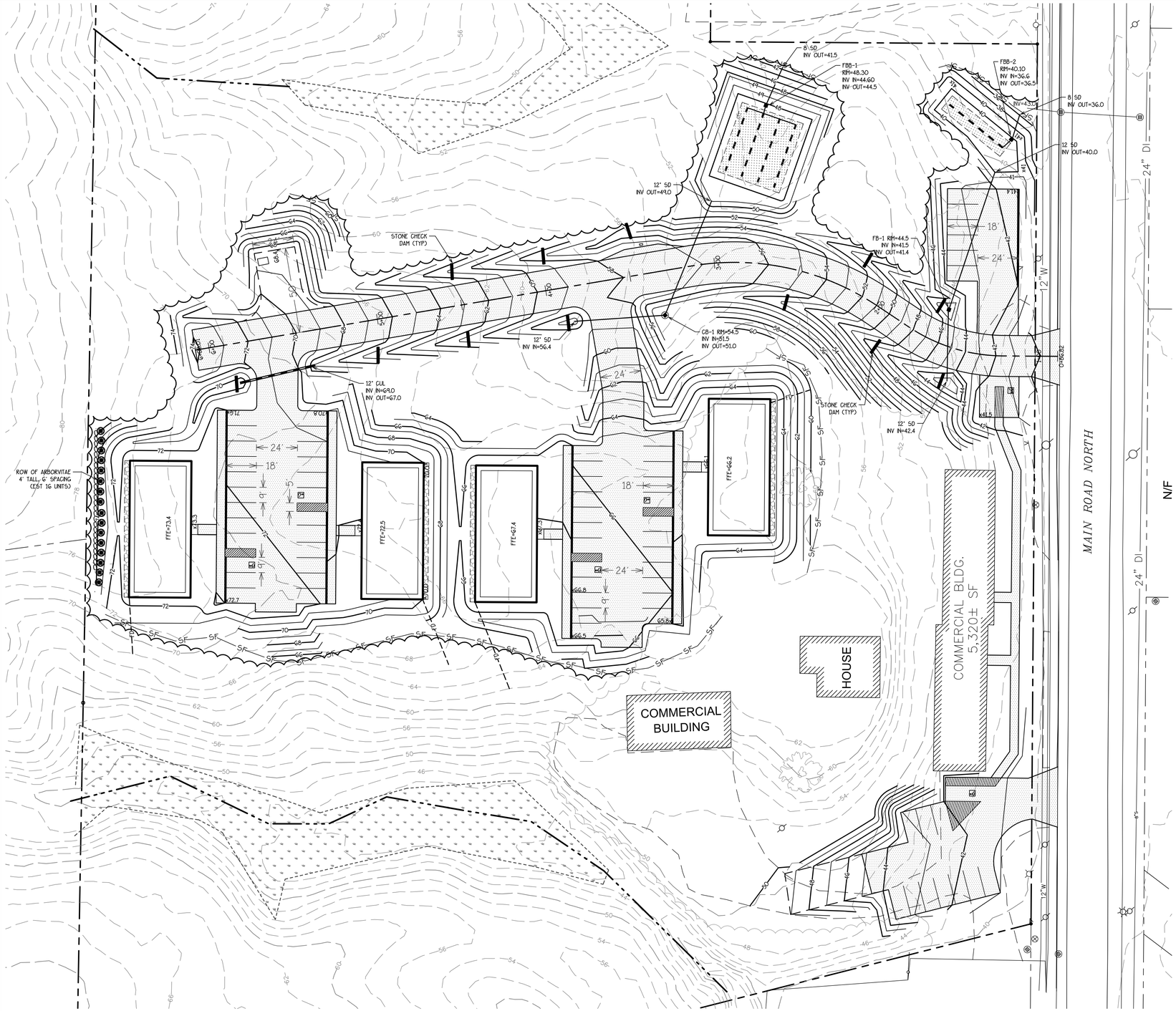

CONSTRUCTION NOTES:

1. ALL EXISTING UTILITIES SHALL BE FIELD VERIFIED BY THE CONTRACTOR PRIOR TO CONSTRUCTION. TEST PITS MAY BE REQUIRED. DIG SAFE SHALL BE NOTIFIED PRIOR TO THE START OF CONSTRUCTION.
2. ALL TREES AND STUMPS SHALL BE CLEARED TO 30' OFF THE CENTERLINE.
3. OVERHEAD UTILITY LINES SHALL BE INSTALLED IN ACCORDANCE WITH THE STANDARDS OF EMERA MAINE. IF INSTALLED BY A PRIVATE CONTRACTOR. CONSTRUCTION PLANS SHALL BE APPROVED BY EMERA MAINE.
4. SEWER CONSTRUCTION SHALL BE PREFORMED IN ACCORDANCE WITH THE TOWN OF HAMPDEN'S STANDARDS. GRAVITY SEWER MAIN SHALL BE 6" PVC, SDR35 OR APPROVED EQUAL AND BE CONSTRUCTED TO THE LINE AND GRADE SHOWN ON THE PLANS. SEWER PIPE AND STRUCTURES SHALL BE PRESSURE AND VACUUM TESTED.
5. CONTRACTOR TO COORDINATE WITH THE TOWN OF HAMPDEN ON CONNECTION TO THE EXISTING SEWER MAIN. LOCATION AND TYPE OF CONNECTION PER TOWN OF HAMPDEN'S REQUIREMENTS.
6. GRAVITY SEWER SERVICES TO BE INSTALLED TO 30' FROM CENTERLINE OF ROAD. SERVICE ENDS TO BE MARKED WITH PAINTED 2x4 LUMBER AND ELECTRONIC MARKERS AS REQUIRED BY THE HAMPDEN SEWER ORDINANCE. PROVIDE SWING TIES TO NEAREST STRUCTURES.
7. STORM DRAIN SHALL BE SMOOTH WALL PIPE INCLUDING HDPE OR PVC. EXPOSED INLETS AND OUTLETS SHALL BE HDPE. SELECT BACK FILL FOR STORM DRAIN TRENCH SHALL BE COARSE GRAVELLY SAND AS APPROVED BY THE ENGINEER. ALL CULVERTS TO BE SMOOTH WALL HDPE PIPE.
8. WATER SERVICE CONSTRUCTION SHALL BE IN ACCORDANCE WITH THE HAMPDEN WATER DISTRICT'S STANDARDS. THE WATER MAIN PIPE SHALL BE 2" HDPE PIPE WITH INSTALLATION AT 10'± OFF CENTERLINE DRIVEWAY ACCESS ROAD. LINE TO A MINIMUM 6' DEPTH COVER. #6 TRACER WIRE SHALL MARK THE WATER MAIN AND ANY NON-MATELLIC SERVICES. THE WATER MAIN SHALL MAINTAIN A 10' HORIZONTAL AND 18" VERTICAL SEPARATION FROM SEWER PIPES AND SERVICES UNLESS APPROVED BY THE DISTRICT. THE CONTRACTOR SHALL OBTAIN A COPY OF THE DISTRICT'S SPECIFICATIONS PRIOR TO THE START OF CONSTRUCTION.
9. WATER SERVICES TO BE INSTALLED TO THE CURB STOPS LOCATED A MINIMUM OF 30' LEFT OF CENTERLINE.
10. ROOF GUTTER DRAINS, IF INSTALLED, SHALL NOT DIRECTLY ENTER THE STORM DRAIN SYSTEM.
11. ALL PAVING SHALL BE IN ACCORDANCE WITH THE LATEST VERSION OF THE MDOT STANDARD SPECIFICATIONS.

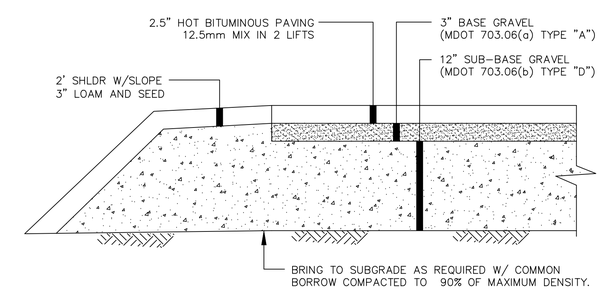

TYPICAL DRIVEWAY SECTION
NOT TO SCALE

SCALE: 1"= 30'
30' 0' 30' 60' 90' 120'

REV:	DATE:	BY:	COMMENTS:
DATE: 27 AUG 20	DESIGN BY: JRK	SCALE: 1"=30'	PROJ. NO: 797

GRADING & DRAINAGE PLAN
DLM PROFESSIONAL CENTER

588 MAIN ROAD NORTH
HAMPDEN, MAINE

FOR:
DLM RENTAL, LLC
21 HUSTUS ROAD
BROOKS, ME 04921

STATE OF MAINE
JAMES R. KISER
No. 6936
LICENSED
PROFESSIONAL ENGINEER
8/27/20

KISER
ENGINEERING & DEVELOPMENT CONSULTING
PO BOX 282, HAMPDEN, MAINE 04444
207-862-4700

SHEET 2-3

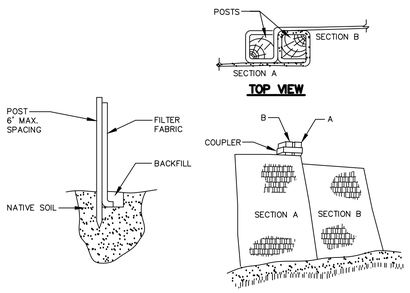

INSTALLATION:
1. EXCAVATE A 6"x 6" TRENCH ALONG THE LINE OF PLACEMENT FOR THE FILTER BARRIER.
2. UNROLL A SECTION AT A TIME AND POSITION THE POSTS AGAINST THE BACK (DOWNSTREAM) WALL OF THE TRENCH.
3. DRIVE POSTS INTO THE GROUND UNTIL APPROXIMATELY 2" OF FABRIC IS LYING ON THE TRENCH BOTTOM.
4. LAY THE TOE-IN FLAP OF FABRIC ONTO THE UNDISTURBED BOTTOM OF THE TRENCH, BACKFILL THE TRENCH AND TAMP THE SOIL. TOE-IN CAN ALSO BE ACCOMPLISHED BY LAYING THE FABRIC FLAP ON UNDISTURBED GROUND AND PILING AND TAMPING FILL AT THE BASE, BUT MUST BE ACCOMPANIED BY AN INTERCEPTION DITCH.
5. JOIN SECTION AS SHOWN ABOVE.
6. BARRIER SHALL BE MIRAFI SILT FENCE OR EQUAL.

SILT FENCE
NTS

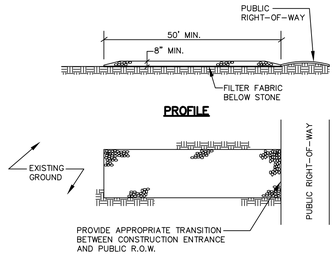

NOTES:
1. STONE SIZE- 2" TO 3" CRUSHED STONE.
2. LENGTH- AS SHOWN ON PLANS, MIN. 50 FEET.
3. THICKNESS- NOT LESS THAN EIGHT (8) INCHES.
4. WIDTH- NOT LESS THAN FULL WIDTH OF ALL POINT OF INGRESS OR EGRESS.
5. MAINTENANCE- THE ENTRANCE SHALL BE MAINTAINED IN A CONDITION WHICH WILL PREVENT TRACKING OR FLOWING OF SEDIMENT ONTO PUBLIC RIGHT-OF-WAY. THIS MAY REQUIRE PERIODIC TOP DRESSING WITH ADDITIONAL STONE AS CONDITIONS DEMAND AND REPAIR AND/OR CLEANOUT OF ANY MEASURES USED TO TRAP SEDIMENT. ALL SEDIMENT SPILLED, DROPPED, WASHED OR TRACKED ONTO PUBLIC RIGHT-OF-WAY MUST BE REMOVED IMMEDIATELY.

STABILIZED CONSTRUCTION ENTRANCE
NTS

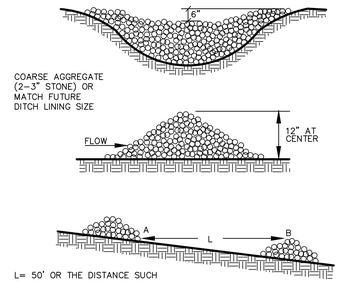

L= 50' OR THE DISTANCE SUCH THAT POINTS A AND B ARE EQUAL ELEVATIONS UNLESS SHOWN OTHERWISE ON THE PLANS

STONE CHECK DAM
NTS

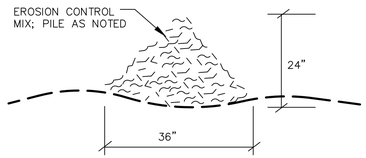

EROSION CONTROL MIX DETAIL
NOT TO SCALE

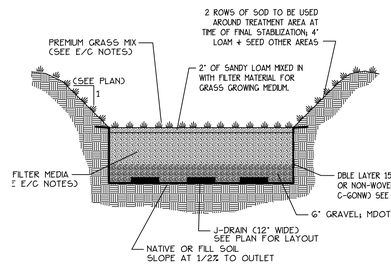

FILTER BED TREATMENT SECTION
NTS

STORMWATER TREATMENT TABLE

FILTER BED	FILTER AREA (DIM)	FILTER AREA (SF)	TREATMENT VOL (CF)	LINER	SURFACE EL	TOP OF BERM
1	38'x43'	1,634	2,711+	POLY	47.0	49.5
2	10'x40'	440	702+	POLY	39.0	40.1

NOTES:
1. GRASS FILTER BED SHALL HAVE FILTER MEDIA CONSISTING OF COARSE LOAMY SAND WITH 20-30% BY VOLUME, OF MODERATE TO FINE SHREDDED BARK MULCH (<5% PASSING #200 SIEVE). SOIL MEDIA SHALL HAVE A GRADATION AS FOLLOWS:

   #10 SIEVE85-100%
   #20 SIEVE70-100%
   #60 SIEVE 15-40%
   #200 SIEVE 8-15%

2. SANDY LOAM SHALL BE MIX 50/50 WITH THE FILTER MEDIA IN THE TOP 2' OF THE BED. THIS LOAM WILL PROVIDE AN IMPROVED GROWING MEDIA FOR THE SEED MIX.
3. GRASS FILTER BEDS TO BE PLANTED TO A PREMIUM SEED MIX AS NOTED, HOWEVER, IF WATER PONDING CREATES STRESS AND FAILURE OF SEED MIX, A WETLAND TOLERANT MIX MAY BE REQUIRED IN THE DIRECT AREA OF PONDING.
4. FILTER MEDIA SHALL NOT BE PLACED UNTIL THE SWALES ARE STABILIZED WITH GRASS OR THE FILTER AREA SHALL BE FULLY ENCLOSED WITH SILT FENCE TO PROTECT THE QUALITY OF THE FILTER.

EROSION CONTROL NOTES:

1. AT THE START OF CONSTRUCTION, SILT FENCE OR EROSION CONTROL MIX BERM SHALL BE PLACED AS SHOWN ON THE PLANS AND/OR AS REQUIRED BY PROGRESSIVE CONSTRUCTION ACTIVITIES. THE CONTRACTOR SHALL PROVIDE AND PLACE SILT FENCE OR HAY BALES ON AN AS NEEDED BASIS TO PROTECT THE OFF-SITE RESOURCES AGAINST EROSION DUE TO CONSTRUCTION ACTIVITIES. THE ENGINEER MAY DIRECT ADDITIONAL SILT FENCE BE PLACED BASED UPON SITE OBSERVATIONS.
2. ALL EROSION CONTROL MEASURES SHALL BE INSTALLED ACCORDING TO THE SPECIFICATIONS OR MANUFACTURES REQUIREMENTS. CONTRACTOR SHALL MAINTAIN ALL MEASURES IN FUNCTIONING ORDER AS REQUIRED TO MINIMIZE EROSION. REFERENCE FOR INSTALLATION AND MAINTENANCE MAY BE OBTAINED FROM THE HANDBOOK "MAINE EROSION AND SEDIMENT CONTROL BMP'S". THE CONTRACTOR SHALL MAINTAIN ALL EROSION CONTROL MEASURES AND CONSTRUCTION ACTIVITIES TO COMPLY WITH THE MCGP 2011.
3. SOIL STOCKPILES ON-SITE SHALL BE PROTECTED BY SILT FENCE ON THE DOWN GRADIENT SIDE. ALL OFF-SITE STOCKPILES OR DISPOSAL SITES SHALL BE PROTECTED BY APPROPRIATE EROSION CONTROL MEASURES. STOCK PILES SHALL BE VEGETATED AS SPECIFIED IN OTHER SECTIONS. CONTRACTOR TO PROVIDE THE ENGINEER LOCATION AND ACCESS TO ANY OFF-SITE STOCKPILE.
4. TEMPORARY SOIL PROTECTION MEASURES SHALL BE APPLIED TO DISTURBED SOIL AREAS NOT PROPOSED TO BE REWORKED WITH IN 14 DAY PERIOD. DURING WINTER CONSTRUCTION, HAY SHALL BE APPLIED AT THE END OF EACH DAY AND PRIOR TO THE GROUND FREEZING OR SNOWFALL.
5. TEMPORARY SOIL PROTECTION:

   A. SEED BED PREPARATION - SOIL SHALL BE LOOSENED TO A DEPTH OF 2" AND TREATED WITH LIME AND FERTILIZER (10-10-10) AT RATES OF 138 AND 13.8 LB/UNIT, RESPECTIVELY. A UNIT IS 1000 SF.

   B. SEEDING - TEMPORARY SEEDING SHALL BE ANNUAL OR WINTER RYE PLANTED AT 1.5 AND 3.0 LB/UNIT, RESPECTIVELY. ANNUAL RYE SHALL BE PLANTED FROM APRIL 15TH THROUGH AUGUST 15TH AND WINTER RYE TO OCTOBER 15TH. NO SEEDING SHALL OCCUR PAST OCTOBER 15TH.

   C. PROTECTION OF SOIL/SEED - SEED OR SOIL SHALL BE PROTECTED WITH HAY MULCH AT A RATE OF 100 LB/UNIT. A 90% COVERAGE IS REQUIRED FOR MULCH AND NETTING. OR EROSION CONTROL MESH SHALL BE USED ON SLOPE OF 15% OR MORE AND THE SLOPE EXTENDS FOR MORE THAN 40 FT. SWALES SHALL USE EROSION CONTROL MESH. FOR WORK WITH IN THE SHORELAND ZONE, HAY MULCH SHALL BE APPLIED AT A RATE OF 50 LB/UNIT. WINTER APPLICATION SHALL BE AT A RATE OF 150-200 LB/UNIT.

   G. PERMANENT SOIL PROTECTION MEASURES SHALL BE INITIATED WITH IN 7 DAYS OF FINAL GRADING OPERATIONS OR IF THE AREA WILL NOT BE WORK FOR OVER A YEAR.

6. PERMANENT SOIL PROTECTION:

   A. LOAM - SPREAD LOAM OVER THE DISTURBED AREA TO A DEPTH AS SPECIFIED ON THE PLANS OR 4"MIN.

   B. SEED BED PREPARATION - THE SEED BED SHALL BE LOOSENED AND TREATED WITH LIME AND FERTILIZER (10-20-20) AT RATES OF 138 AND 13.8 LB/UNIT RESPECTIVELY AND WORKED INTO THE SOIL PRIOR TO SEED APPLICATION.

   C. SEEDING - ALL SEED SHALL BE A PREMIUM SEED MIXTURE SUITABLE FOR THE AREA TO BE SEEDED. ALL SEEDING SHALL BE COMPLETED PRIOR TO OCTOBER 15T.

   D. PROTECTION - SEED SHALL BE PROTECTED BY HAY MULCH APPLIED AT 100 LB/UNT AND ANCHORED WITH RBM PLUS OR AEROSPARY 70. HAY MULCH WITH NETTING OR EROSION CONTROL MESH SHALL BE PLACED ON SLOPES GREATER THAN 8% AND 40 FT LONG AND AT THE BOTTOM OF ALL SWALES. THE OWNER'S REPRESENTATIVE MAY REQUIRE EROSION CONTROL MESH IF DRAINAGE/SLOPE CONDITIONS MERIT THE SUBSTITUTION.

8. THE CONTRACTOR SHALL INSTALL AND MAINTAIN A CONSTRUCTION ENTRANCE AT THE ACCESS TO MAIN ROAD NORTH. THE ENTRANCE SHALL BE MAINTAINED PER THE DETAIL AND MAIN ROAD NORTH SHALL BE KEPT CLEAN OF ANY CONSTRUCTION DEBRIS.
9. DURING DRY WEATHER, THE CONTRACTOR SHALL MINIMIZE DUST EMISSIONS BY APPLICATION OF WATER AND/OR CALCIUM ON AN AS NEEDED BASIS.
10. SOD SHALL BE USED TO STABILIZE DISTURBED AREAS AT THE INLETS AND OUTLETS OF ALL CULVERTS, FIELD INLET/OUTLETS AND ALL BASINS. UNLESS OTHERWISE NOTED ON THE PLANS.
11. EROSION CONTROL MESH SHALL BE USED IN DITCHES OVER 5% GRADE OR AS DIRECTED BY THE ENGINEER.
12. DEWATERING FLOWS SHALL BE DIRECTED TO TEMPORARY SEDIMENT BASINS OR EXISTING VEGETATED AREAS. FLOWS SHALL NOT BE DISCHARGED TO DISTURBED AREAS.
13. INSPECTION AND MAINTENANCE (BY THE OWNER OR CONTRACTOR'S QUALIFIED REPRESENTATIVE)

   A. A VISUAL INSPECTION SHALL BE PREFORMED WEEKLY OR AFTER SIGNIFICANT RAINFALL EVENTS (GREATER THAN 0.1"). REPAIR STRUCTURES AS REQUIRED AND WITHIN 7 DAYS OR THE NEXT STORM EVENT.

   B. SEDIMENT FROM BEHIND SILT FENCE, STONE CHECK DAME AND/OR HAY BALES SHALL BE REMOVED WHEN IT REACHES A DEPTH OF 6" AND REGARDED INTO THE SITE.

   C. SEEDED AREAS SHALL BE INSPECTED EVERY 7 DAYS UNTIL 75% COVERAGE IS ACHIEVED. SEED FAILURES SHALL BE RESEEDED AND THE CONTRACTOR SHALL PROVIDE APPROPRIATE SOIL MOISTURE CONDITIONS.

   D. EROSION CONTROL MEASURES SHALL BE REMOVED BY THE CONTRACTOR ONCE 90% VEGETATION COVERAGE HAS BEEN ESTABLISHED OR WITHIN 30 DAYS AFTER PERMANENT STABILIZATION MEASURES. THESE AREAS SHALL BE GRADED AND STABILIZED UPON REMOVAL.

   E. THE INSPECTOR SHALL KEEP A LOG OF ACTIVITIES INCLUDING DATES, OBSERVATIONS AND CORRECTIVE ACTIONS, IF NEEDED.

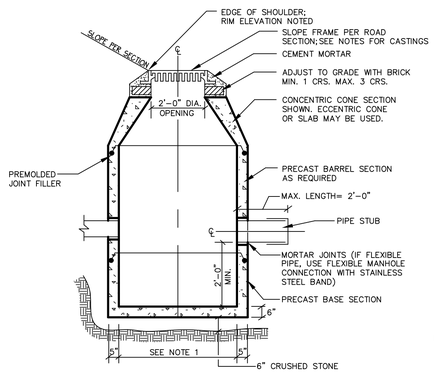

NOTES:
1. 4'-0" I.D. TYPICAL. SOME STRUCTURES MAY REQUIRE LARGER I.D. PROVIDE SHOP DRAWINGS.
2. DRAINAGE STRUCTURES TO BE DESIGNED FOR H-20 LOADING.
3. PIPE SIZES AND INVERTS AS NOTED ON PLANS.
4. CATCH BASIN FRAME AND GRATE 24" OR APPROVED EQUAL.
5. DRAINAGE MANHOLE FRAME AND COVER TO BE 24" OR APPROVED EQUAL. COVER SHALL BE MARKED "DRAIN".

TYPICAL CATCH BASIN
NTS

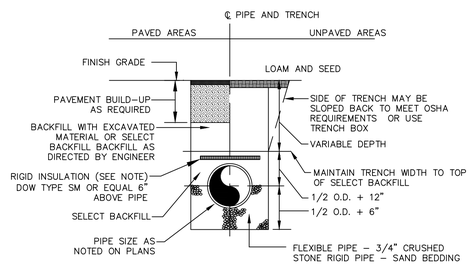

NOTE: 1" OF THICKNESS AND EXTEND 12" BEYOND PIPE FOR EACH FOOT OF COVER LESS THAN 4'

TYPICAL TRENCH SECTION
NTS

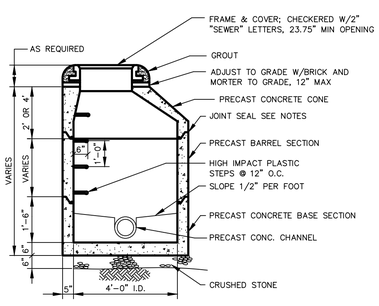

NOTES:
1. PIPE CONNECTIONS SHALL BE WATERTIGHT FLEXIBLE BOOT CONNECTORS
2. JOINT SEAL TO BE INNER LAP-FLEXIBLE BUTYAL RESIN SEALANT; OUTER LAP-FLEXIBLE BUTYL RUBBER-HYDROCARBON AND SODIUM BENTONITE SEALANT STRIP; OUTER SURFACE 9" WIDE EPDM SELF BONDING WRAP.
3. EXTERIOR OF STRUCTURE TO BE TREATED WITH DAMPPROOFING.
4. EXTERIOR OF STRUCTURE TO BE WRAPPED WITH 3 TURNS OF 15 MIL POLY.

PRECAST MANHOLE
NTS

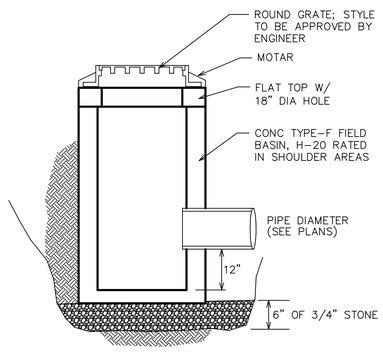

FIELD BASIN CONC DETAIL
NOT TO SCALE

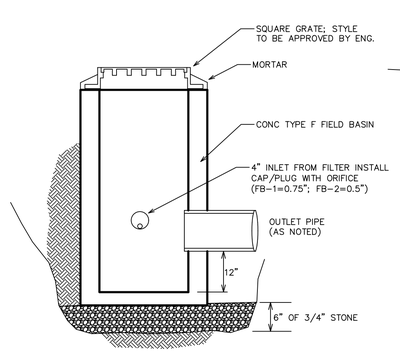

FILTER BED BASINS
NOT TO SCALE

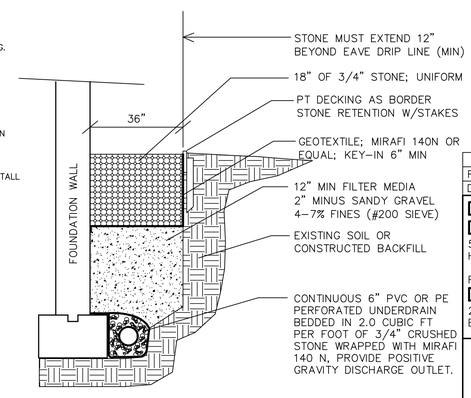

NOTE: INSTALL ONE 3" PERFORATED PIPE INTO STONE LAYER FOR OBSERVATION PORT

DRIP EDGE TREATMENT SECTION
NTS

SCALE: 1"= 30'

30' 0' 30' 60' 90' 120'

REV:	DATE:	BY:	COMMENTS:		
DATE: 27 AUG 20		DESIGN BY: JRK	SCALE: 1"=30'		PROJ. NO: 797

DETAILS
DLM PROFESSIONAL CENTER
588 MAIN ROAD NORTH
HAMPDEN, MAINE

FOR:
DLM RENTAL, LLC
21 HUSTUS ROAD
BROOKS, ME 04921

STATE OF MAINE
JAMES R. KISER
LICENSED
PROFESSIONAL ENGINEER
8/27/20

KISER

ENGINEERING & DEVELOPMENT CONSULTING
PO BOX 282, HAMPDEN, MAINE 04444
207-862-4700

SHEET 3-3